LEOCH BATTERY

DEEP CYCLE AGM TECHNOLOGY

DEEP CYCLE AGM BATTERY

LDCL12-105-G27-T BCI GROUP 27

FEATURES & BENEFITS

- True deep cycle AGM technology-GREEN SOLUTION
- Over 99.99% virgin lead for grid plate and active material
- Heavy duty grid/paste design for deep cycle application
- Maintenance free, non-spillable, valve-regulated
- Double separator configuration:long cycle life & High energy density and super anti-vibration design
- Low self-discharge for longer shelf life

ELECTRICAL SPECIFICATIONS

Voltage(V)	Capacity (AH)					Reserve Capacity (Min)		
	100HR	20HR	10HR	5HR	3HR	@25A	@56A	@75A
12	112	105	98	88	80	204	/	50

PHYSICAL SPECIFICATIONS

Model	Dimensions (mm/inches)				Weight (kg/lbs)	Terminal Type (Standard)	Case Material
	Length	Width	Height	Total Height			
LDCL12-105-G27-T	306 (12.05)	168 (6.61)	208 (8.19)	214 (8.43)	27.3 (60.2)	T6-A	ABS

Operating Temperature Range		
Discharge	Charge	Storage
-15℃～50℃(5°F～122°F)	0℃～40℃(32°F～104°F)	-15℃～40℃(5°F～104°F)

LDCL12-105-G27-T

DEEP CYCLE AGM BATTERY

DIMENSIONS

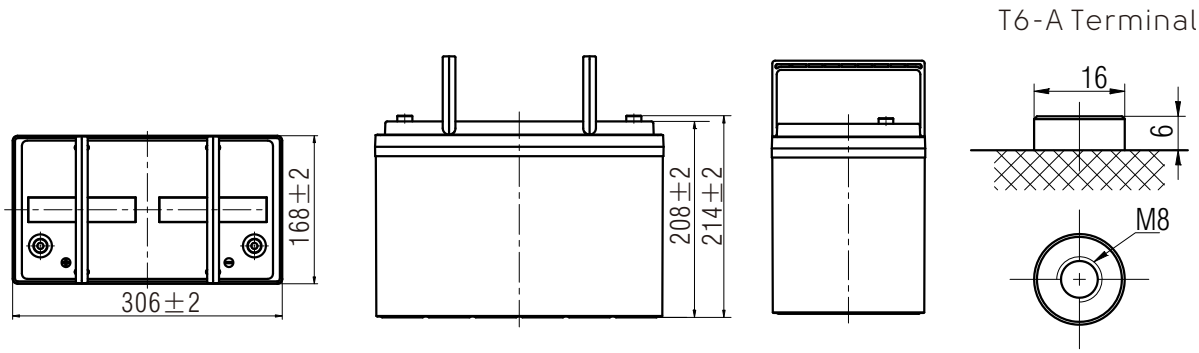

Note: Terminal Torque Values in-lb(Nm) : 97.28-130.0(11-14.7)

PERFORMANCE CHARACTERISTICS

LEOCH LDCL AGM Charging Profile

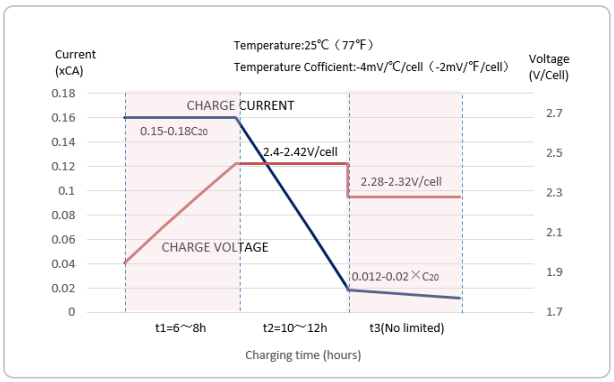

Relationship of OCV and State Of Charge (25℃,77℉)

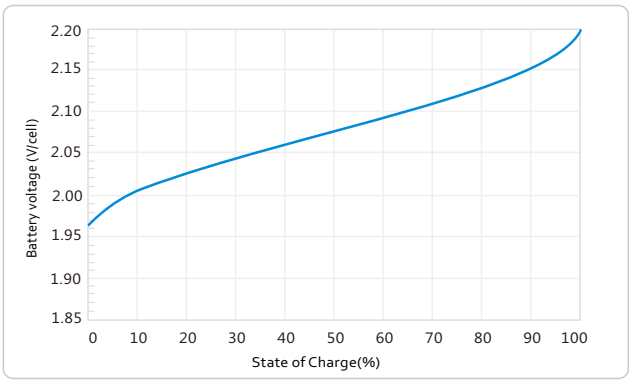

Cycle life in relation to Depth Of Discharge

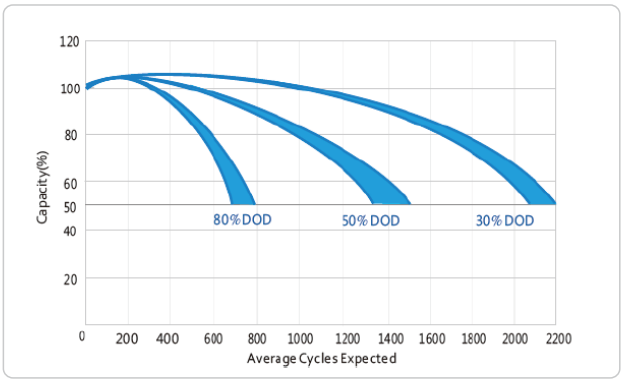

Self-discharge Characteristic

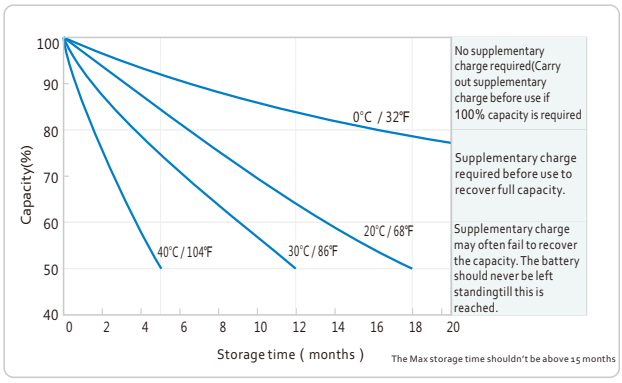

- LEOCH INTERNATIONAL SALES OFFICE:
  Add: 5th Floor, Xinbaohui Bldg.
  Nanhai Blvd, Nanshan, Shenzhen, China. 518054
  Tel: +86-755-86036060(100 lines)Fax: +86-755-26067269
  E-mail: export@leoch.com
  web:www.leoch.com

© 2018 LEOCH. All rights reserved.Trademarks and logos are the property of LEOCH and its affiliates unless otherwise noted.Subject to revisions without prior notice.

Publication No: LB-LDCL-PD-EN-V1.0-201807