L60-N24-A [12V28Ah]

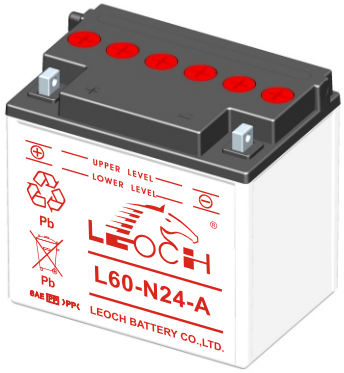

Dimensions (mm)

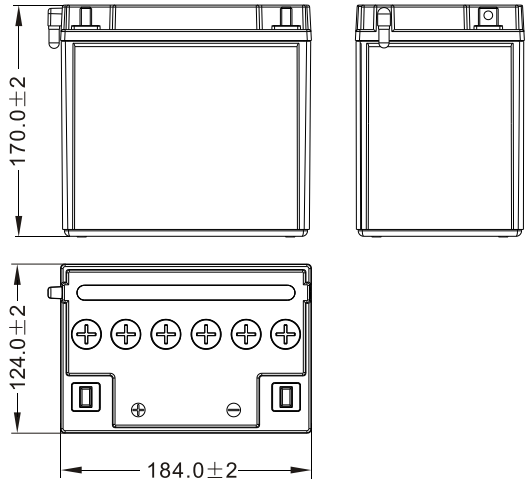

Standard Terminal (mm)

Terminal Type	G

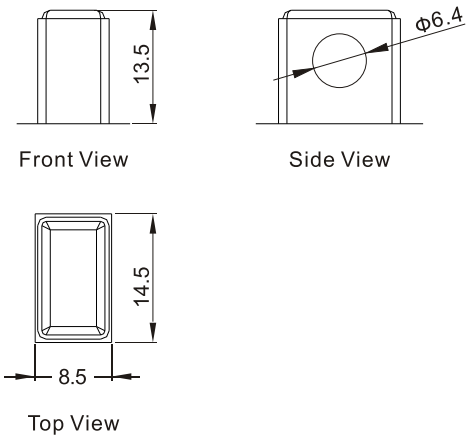

Physical Specification

Nominal Voltage		12V
Nominal Capacity (10HR)		28Ah
Dimension	Length	184±2mm (7.24 inches)
	Width	124±2mm (4.88 inches)
	Container Height	170±2mm (6.69 inches)
	Total Height (with Terminal)	170±2mm (6.69 inches)
Weight	Battery(with acid): Approx 7.96kg (17.55lbs)	
	Electrolyte: Approx2.46kg (5.42lbs)	

* High performance and dry charged high quality and flooded battery
* Low maintenance
* Powerful 280 cold cranking amps
* Shipped without battery electrolyte pre-charged and ready to install
* Replaces none battery

Discharge Characteristics (25℃,77℉)

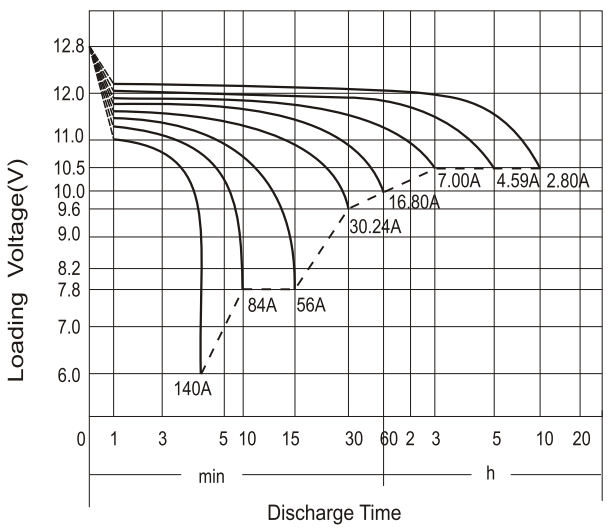

Electrical Specification

Rated Capacity	10 hour rate (2.80A)	28.00Ah
	5 hour rate (4.59 A)	22.96Ah
	2 hour rate (9.80A)	19.60Ah
	1 hour rate (16.80 A)	16.80Ah
	0.5 hour rate (30.24A)	15.12Ah
Capacity affected by Temperature	40 ℃ (104 ℉)	106%
	25 ℃ (77 ℉)	100%
	0 ℃ (32 ℉)	86%
	-15 ℃ (5 ℉)	65%
Charging Methods	Full Charge	Constant-Voltage Charge: Initial charging current: less than 8.4A Voltage: 14.40 V ~ 15.00 V at 25 ℃ (77 ℉) Charging time: 16 ~24h Constant-Current Charge: Charging current: 2.8A, when charging voltage up to 15.60V, continue to charge 2h.
	Floating Charge	No limit on Initial charging current Voltage: 13.50 V ~ 13.80 V at 25 ℃ (77 ℉)