EBX16-BS-1 [12V14Ah]

Dimensions (mm)

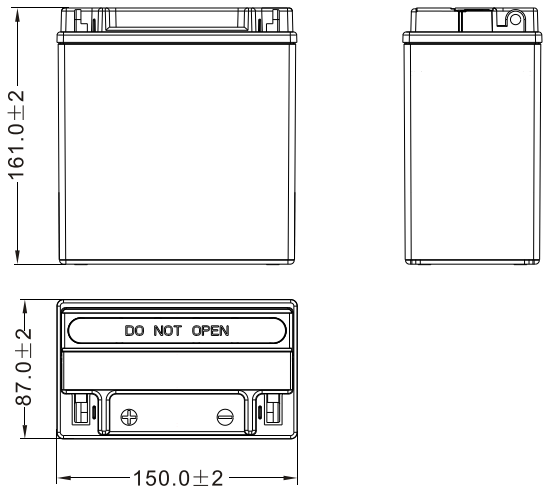

Standard Terminal (mm)

Terminal Type	E

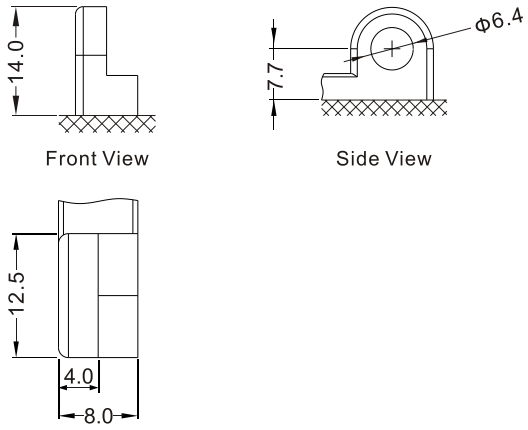

Physical Specification

Nominal Voltage		12V
Nominal Capacity (10HR)		14Ah
Dimension	Length	150±2mm (5.91 inches)
	Width	87±2mm (3.43 inches)
	Container Height	161±2mm (6.34 inches)
	Total Height (with Terminal)	161±2mm (6.34 inches)
Weight	Battery(with acid): Approx 4.96kg (10.94lbs)	
	Electrolyte: Approx 0.99kg (2.18lbs)	

* Sealde AGM battery
* Fresh Pack, Maintenance Free
* Powerful 230 cold cranking amps
* Rest after filling acid
* Maximum tilt angle for installation: 25°

Discharge Characteristics (25℃,77℉)

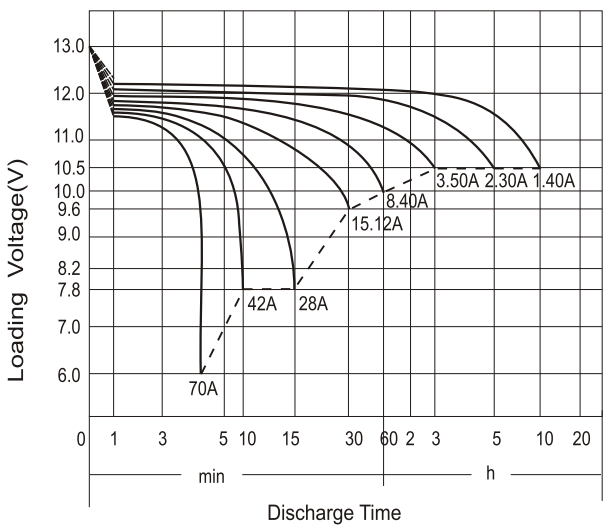

Electrical Specification

Rated Capacity	10 hour rate (1.40 A)	14.00Ah
	5 hour rate (2.30 A)	11.48Ah
	2 hour rate (4.90 A)	9.80Ah
	1 hour rate (8.40 A)	8.40Ah
	0.5 hour rate (15.12 A)	7.56Ah
Capacity affected by Temperature	40 ℃ (104 ℉)	106%
	25 ℃ (77 ℉)	100%
	0 ℃ (32 ℉)	86%
	-15 ℃ (5 ℉)	65%
Charging Methods	Full Charge	Constant-Voltage Charge: Initial charging current: less than 4.2A Voltage: 14.40 V ~ 15.00 V at 25 ℃ (77 ℉) Charging time: 15 ~18h Constant-Current Charge: Charging current: $0.1C_{10}$=1.40A, when charging voltage up to 14.40V, continue to charge 4h
	Floating Charge	No limit on Initial charging current Voltage: 13.50 V ~ 13.80 V at 25 ℃ (77 ℉)